Practical Design to Eurocode 2

The webinar will start at 12.30

Analysis

Lecture 4

14th October 2015

Model Answers to

Week 3

Beam Exercise - Flexure & Shear

G_k = 10 kN/m, Q_k = 6.5 kN/m (Use EC0 eq. 6.10)

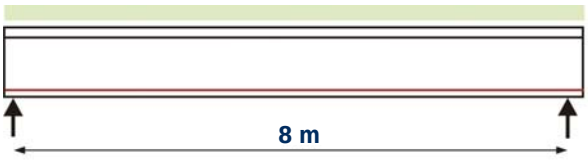

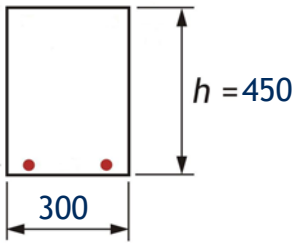

Cover = 35 mm to each face

f_{ck} = 30MPa

Design the beam in flexure and shear

Aide memoire

Example: ULS Combination of Actions

Partial Factors for Actions (ULS)

$\gamma_G = 1.35$ (NA 2.2.3.3 and Table NA.A1.2)

$\gamma_Q = 1.5$ (NA 2.2.3.3 and Table NA.A1.2)

Relevant ψ factors

ψ_0 - office areas = 0.7 (Table NA.A.A1.1)

ψ_0 - wind = 0.5 (Table NA.A.A1.1)

Exp (6.10) Remember this from the first week?

Design Flowchart

The following flowchart outlines the design procedure for rectangular beams with concrete classes up to C50/60 and grade 500 reinforcement

Carry out analysis to determine design moments (M)

Determine K and K' from:

$$K = \frac{M}{b d^2 f_{ck}} \quad \& \quad K' = 0.6\delta - 0.18\delta^2 - 0.21$$

Note: δ = 1.0 means no redistribution and δ = 0.8 means 20% moment redistribution.

Is K ≤ K' ? — Yes: No compression steel needed - singly reinforced; No: Compression steel needed - doubly reinforced

δ	K'
1.00	0.208
0.95	0.195
0.90	0.182
0.85	0.168
0.80	0.153
0.75	0.137
0.70	0.120

It is often recommended in the UK K' is limited to 0.168 to ensure ductile failure

Singly-reinforced Beam

Calculate lever arm z from: $z = \frac{d}{2}\left[1 + \sqrt{1 - 3.53K}\right] \le 0.95d$ *

* A limit of 0.95d is considered good practice, it is not a requirement of Eurocode 2.

Calculate tension steel required from: $A_s = \frac{M}{f_{yk} z}$

Check minimum reinforcement requirements:

$$A_{s,min} \ge \frac{0.26 f_{ctm} b_t d}{f_{yk}} \ge 0.0013 b_t d$$

Check max reinforcement provided $A_{s,max} \le 0.04A_c$ (Cl. 9.2.1.1)
Check min spacing between bars > ϕ_{bar} > 20 > A_{gg} + 5
Check max spacing between bars

Or Concise Table 15.5

Beam Example 1 - Shear

Shear force, V_{Ed} = 176.25 x 8/2 = 705 kN

Shear stress:

$v_{Ed} = V_{Ed}/(b_w 0.9d) = 705 \times 10^3/(450 \times 0.9 \times 934)$

= 1.68 MPa

$v_{Rd,max\,\theta=2.5}$ = 3.64 MPa

$v_{Rd,max\,\theta=2.5} > v_{Ed}$

$\therefore \cot\theta = 2.5$

$A_{sw}/s = v_{Ed}\, b_w/(f_{ywd} \cot\theta)$

A_{sw}/s = 1.68 x 450 / (435 x 2.5)

A_{sw}/s = 0.70 mm

Try H8 links with 3 legs.

A_{sw} = 151 mm²

s < 151 /0.70 = 215 mm

⇒ provide H8 links at 200 mm spacing

f_{ck}	$v_{Rd,\,cot\,\theta=2.5}$	$v_{Rd,\,cot\,\theta=1.0}$
20	2.54	3.68
25	3.10	4.50
28	3.43	4.97
30	3.64	5.28
32	3.84	5.58
35	4.15	6.02
40	4.63	6.72
45	5.08	7.38
50	5.51	8.00

Workings:- Load, M_{ult}, d, K, K', (z/d,) z, A_s, V_{Ed}, A_{sw}/s

G_k = 10 kN/m, Q_k = 6.5 kN/m (Use eq. 6.10)

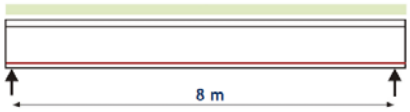

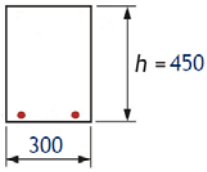

Cover = 35 mm to each face

f_{ck} = 30MPa

Design the beam in flexure and shear

Φ mm	Area, mm²
8	50
10	78.5
12	113
16	201
20	314
25	491
32	804

Solution - Flexure

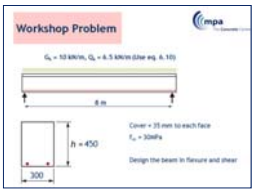

ULS load per m = (10 x 1.35 + 6.5 x 1.5) = 23.25 kN/m

M_{ult} = 23.25 x 8^2/8 = 186 kNm

d = 450 - 35 - 10 - 32/2 = 389 mm

$$K = \frac{M}{bd^2 f_{ck}} = \frac{186 \times 10^6}{300 \times 389^2 \times 30} = 0.137 \qquad K' = 0.208$$

$K < K' \Rightarrow$ No compression reinforcement required

$$z = \frac{d}{2}\left[1+\sqrt{1-3.53K}\right] = \frac{389}{2}\left[1+\sqrt{1-3.53 \text{ x } 0.137}\right] = 0.86 \text{ x } 389 = 334 \le 0.95d$$

$$A_s = \frac{M}{f_{yd}\, z} = \frac{186 \text{ x } 10^6}{435 \text{ x } 334} = 1280 \text{ mm}^2$$

Provide 3 H25 (1470 mm^2)

Solution - Shear

Shear force, V_{Ed} = 23.25 x 8 /2 = 93 kN

Shear stress:

v_{Ed} = $V_{Ed}/(b_w\, 0.9d)$ = 93 x 10^3/(300 x 0.9 x 389)

= 0.89 MPa

v_{Rd} = 3.64 MPa

$v_{Rd} > v_{Ed}$ ∴ cot θ = 2.5

A_{sw}/s = $v_{Ed}\, b_w/(f_{ywd} \cot \theta)$

A_{sw}/s = 0.89 x 300 /(435 x 2.5)

A_{sw}/s = 0.24 mm

Try H8 links with 2 legs, A_{sw} = 101 mm^2

s < 101 /0.24 = 420 mm

f_{ck}	v_{Rd}, cot θ = 2.5	v_{Rd}, cot θ = 1.0
20	2.54	3.68
25	3.10	4.50
28	3.43	4.97
30	3.64	5.28
32	3.84	5.58
35	4.15	6.02
40	4.63	6.72
45	5.08	7.38
50	5.51	8.00

Maximum spacing = 0.75 d = 0.75 x 389 = 292 mm

$\Rightarrow$ provide H8 links at 275 mm spacing

Analysis

Lecture 4

12th October 2016

Summary: Lecture 4

EN 1992-1-1: Section 5 Structural Analysis:

- Section 5.1 General
- Section 5.2 Geometric Imperfections
- Section 5.3 Idealisation
- Sections 5.4 & 5.5 Linear Elastic Analysis
- Section 5.6 Plastic Analysis
- Section 5.6.4 Strut & Tie
  - Worked Example Using Strut & Tie
- Sections 5.7 to 5.11 - outline
- Exercises

Section 5.1 General

Structural Analysis (5.1.1)

- Common idealisations used:
  - linear elastic behaviour
  - linear elastic behaviour with limited redistribution
  - plastic behaviour
  - non-linear behaviour
- Local analyses are required where linear strain distribution is not valid:
  - In the vicinity of supports
  - Local to concentrated loads
  - In beam/column intersections
  - In anchorage zones
  - At changes in cross section

Soil/Structure Interaction (5.1.2)

- Where soil/structure interaction has a significant affect on the structure use EN 1997-1
- Simplifications (see Annex G) include:
  - flexible superstructure
  - rigid superstructure; settlements lie in a plane
  - foundation system or supporting ground assumed to be rigid
- Relative stiffness between the structural system and the ground > 0.5 indicate rigid structural system

Second Order Effects (5.1.4)

- For buildings 2nd order effects may be ignored if they are less than 10% of the corresponding 1st order effects.

  (But of course you first need to know how big they are!)

- For 2nd order effects with axial loads, (columns), two alternative methods of analysis are permitted:
  - Method A based on nominal stiffnesses (5.8.7)
  - Method B based on nominal curvature (5.8.8)

Section 5.2 Geometric Imperfections

Geometric Imperfections (5.2)

- Out-of-plumb imperfection is represented by an inclination, θ_i where

  $\theta_i = \theta_0 \alpha_h \alpha_m$

  where $\theta_0 = 1/200$

  $\alpha_h = 2/\sqrt{l}$; $2/3 \leq \alpha_h \leq 1$

  $\alpha_m = \sqrt{(0,5(1+1/m)}$

  l is the height of member (m)

  m is the number of vert. members

- Deviations in cross-section dimensions are normally taken into account in the material factors and should not be included in structural analysis

- Imperfections need not be considered for SLS

Geometric Imperfections (5.2)

The effect of geometric imperfections in isolated members may be accounted for in one of two different ways: either:

a) as an eccentricity, e_i, where

$e_i = \theta_i \, l_0/2$

So for walls and isolated columns $e_i = l_0/400$,

or

b) as a transverse force, H_i, where

$H_i = \theta_i N$ for unbraced members

$H_i = 2\theta_i N$ for braced members

Geometric Imperfections (5.2)

a) & b) (cont)

e_i and H_i in isolated members (e.g.columns)

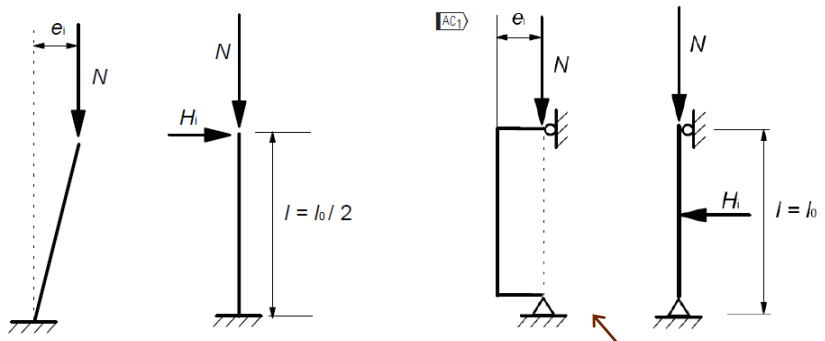

Unbraced

Braced

Most usual

Geometric Imperfections (5.2)

b) (cont)

***H_i* in structural systems**

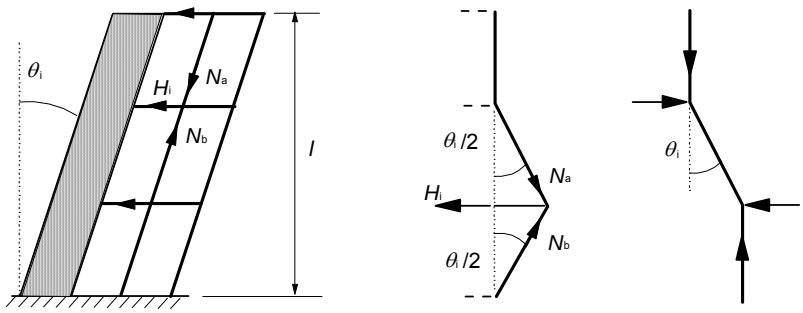

Bracing System	Floor Diaphragm	Roof
$H_i = \theta_i (N_b - N_a)$	$H_i = \theta_i (N_b + N_a)/2$	$H_i = \theta_i N_a$

Geometric Imperfections (5.2)

b) (cont)

Partial factors for H_i

It is not clear how the notional force H_i should be regarded, i.e. as a permanent action, a variable action, an accidental action.

However by inference if should be the same as for the constituent axial loads N, N_{Ed}, N_a and/or N_b.

i.e. $\gamma_{Hi} = (1.35G_k + 1.5Q_k)/(G_k + Q_k)$

But TCC's *Worked Examples* says "As H_i derives mainly from permanent actions its resulting effects are considered as being a permanent action too." and $\gamma_{Hi} = \gamma_G = 1.35$ was used.

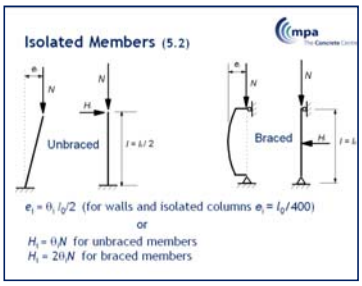

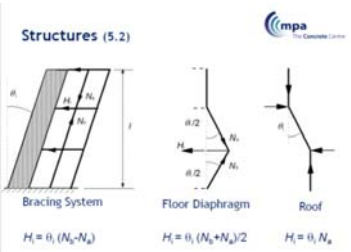

Section 5.3 Idealisation

Idealisation of the structure (5.3)

As week 2

- Beam: Span ≥ 3*h* otherwise it is a deep beam
- Slab: Minimum panel dimension ≥ 5*h*
  - One-way spanning

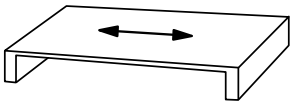

- Ribbed or waffle slabs need not be treated as discrete elements provided that:
  - rib spacing ≤ 1500mm
  - rib depth below flange ≤ 4*b*
  - flange depth ≥ 1/10 clear distance between ribs or 50mm
    - transverse ribs are provided with a clear spacing ≤ 10 *h*
- Column: $h \leq 4b$ and $L \geq 3h$ otherwise it should be considered as a wall

Effective Flange Width (5.3.2.1)

As week 2

$b_{eff} = \Sigma\, b_{eff,i} + b_w \leq b$

where

$b_{eff,i} = 0{,}2b_i + 0{,}1l_0 \leq 0{,}2l_0$

and $b_{eff,i} \leq b_i$

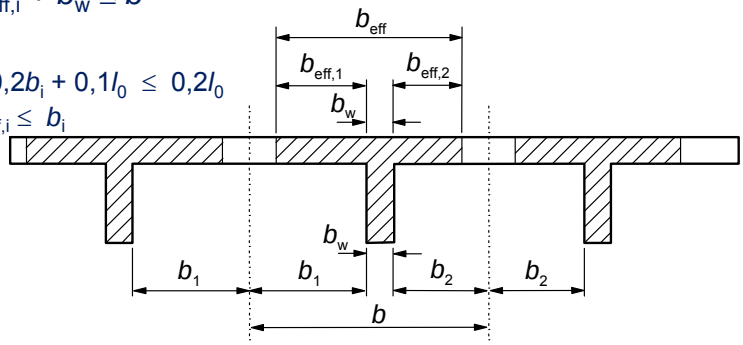

l_0, is the distance between points of zero moment , viz:

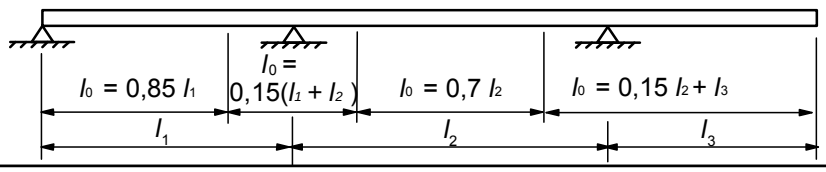

Effective Length of Beam or Slab (5.3.2.2)

As week 2

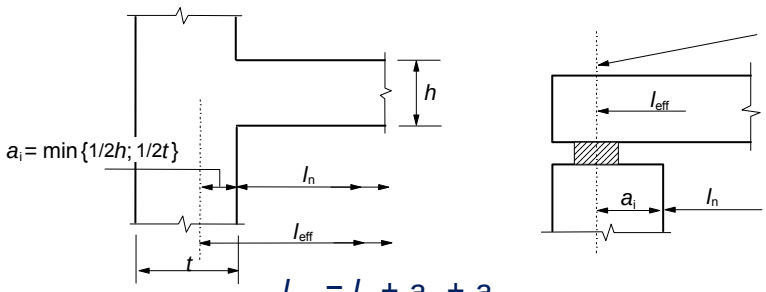

$l_{eff} = l_n + a_1 + a_2$

- The design moment and reaction for monolithic support should generally be taken as the greater of the elastic and redistributed values
- Critical design moment usually at face of support. ($\geq$ 0,65 the full fixed moment).
- Permitted reduction, $\Delta M_{Ed} = F_{Ed.sup}t/8$

Sections 5.4 & 5.5
Linear Elastic Analysis

Linear Elastic Analysis (5.4)

- Linear elastic analysis may be used for both ULS and SLS
- Linear elastic analysis may be carried assuming:
  - uncracked sections (concrete section only)
  - linear stress-strain relationships
  - mean value of the modulus of elasticity
- For thermal deformation, settlement and shrinkage effects at ULS a reduced stiffness corresponding to cracked sections may be assumed.

Linear Elastic Analysis with Limited Redistribution (5.5)

- In continuous beams or slabs which are mainly subject to flexure and for which the ratio of adjacent spans is between 0,5 and 2

  $\delta \geq 0{,}4 + (0{,}6 + 0{,}0014/\varepsilon_{cu2})x_u/d$

  $\geq 0{,}7$ for Class B and C reinforcement

  $\geq 0{,}8$ for Class A reinforcement

  where:

  δ is (redistributed moment)/(elastic moment)

  x_u is the neutral axis depth after redistribution

- For column design the elastic values from the frame analysis should be used (not the redistributed values).

Redistribution Limits

for Class B & C Steel

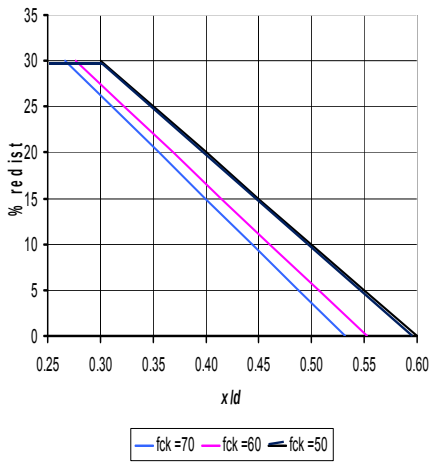

for Class A Steel

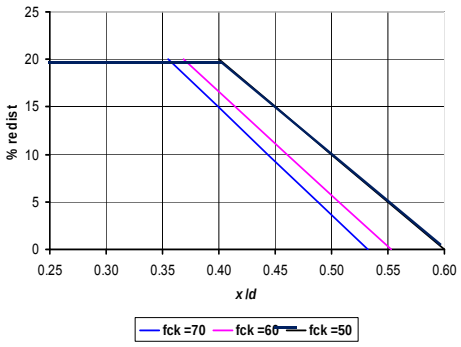

Flat Slabs: Annex I

As week 5

The division of Flat Slabs into Column strips and Middle strips is dealt with in Annex I, under Equivalent Frame Analysis

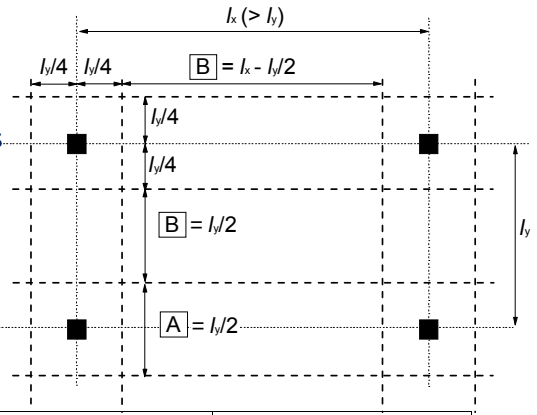

B - Middle strip

A - Column strip

	Negative moments	Positive moments
Column Strip	60 - 80%	50 - 70%
Middle Strip	40 - 20%	50 - 30%

Note: Total negative and positive moments to be resisted by the column and middle strips together should always add up to 100%.

5.6 Plastic Analysis

Plastic Analysis (5.6)

- Plastic analysis may be used for ULS
- Plastic analysis requires ductility which is provided if:
  - $x_u/d \leq 0.25$ for $\leq$ C50/60
    (or $x_u/d \leq 0.15$ for $\leq$ C55/67) ($\equiv K \approx 0.10$)

  and
  - Class B or C reinforcement used

  and
  - $0.5 < M_{sppt} / M_{span} < 2.0$)
- For higher strengths – check rotation capacity to 5.6.3.

Plastic Analysis : Yield Line

Yield Line Method
Based on the 'work method'

External energy **E**xpended by the displacement of loads
=
Internal energy **D**issipated by the yield lines rotating

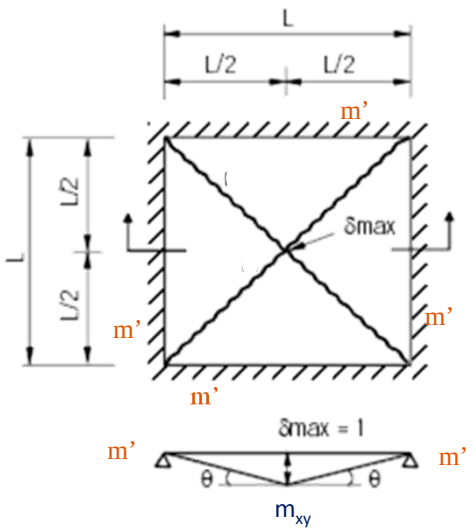

Plastic Analysis : Yield Line & Flat Slabs

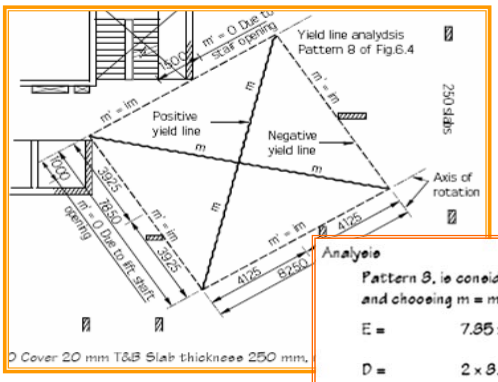

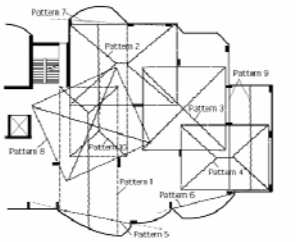

Analysis

Pattern 8, is considered as a panel of a slab supported on four sides. Applying the and choosing m = m'

E = 7.85 × 8.25 × 21.7 × 1/3 = 469

D = 2 × 8.25 × m × 1/3.925 = 4.2m

2 × 7.85 × m × 1/4.125 = 3.8m

m' × (8.25 + 6.75) × 1/3.925 = 3.8m' = 3.8m

m' × (7.85 + 6.85) × 1/4.125 = 3.5m' = 3.5m

15.3m

From D = E, we get :

15.3m = 469

m = 469 / 15.3 = 30.65 kNm/m

Upper bound (correct or unsafe) so . .

+10%

5.6.4 Strut and Tie

What is strut and tie?

Strut-and-tie models (STM) are trusses consisting of struts, ties and nodes.

a) Modelling

Imagine or draw stress paths which show the elastic flow of forces through the structure

b) STM

Replace stress paths with polygons of forces to provide equilibrium.

Conventionally, struts are drawn as dashed lines, ties as full lines and nodes numbered.

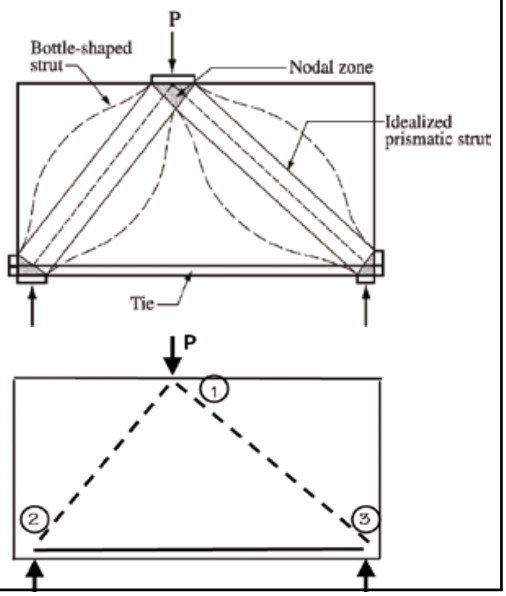

What is strut and tie?

c) Design members

- Design ties
- Check nodes and struts (may be)

d) Iterate

Minimise strain energy (minimise length of ties)

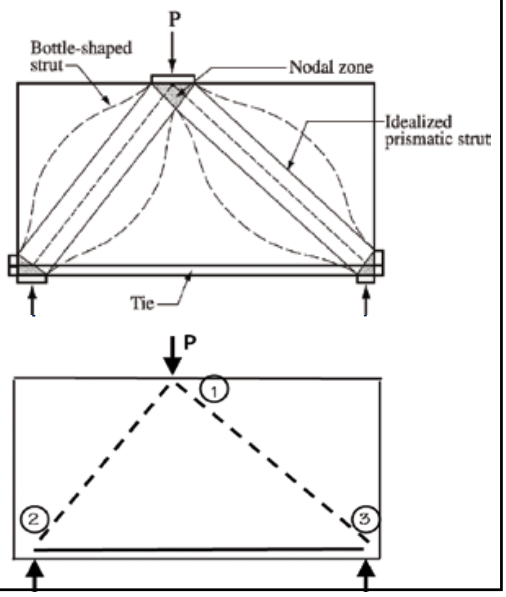

What is strut and tie?

Strut and tie models are based on the lower bound theorem of plasticity which states that any distribution of stresses resisting an applied load is safe providing:

- Equilibrium is maintained

and

- Stresses do not exceed "yield"

What is strut and tie?

In strut and tie models trusses are used with the following components:

- Struts (concrete)
- Ties (reinforcement)
- Nodes (intersections of struts and ties)

Eurocode 2 gives guidance for each of these.

In principle - where non-linear strain distribution exists, strut and tie models may be used. e.g

- Supports
- Concentrated loads
- Openings

What is Strut and Tie?

A structure can be divided into:

- B (or beam or Bernoulli) regions in which plane sections remain plane and design is based on 'normal' beam theory,

and

- D (or disturbed) regions in which plane sections do not remain plane; so 'normal' beam theory may be considered inappropriate and Strut & Tie may be used.

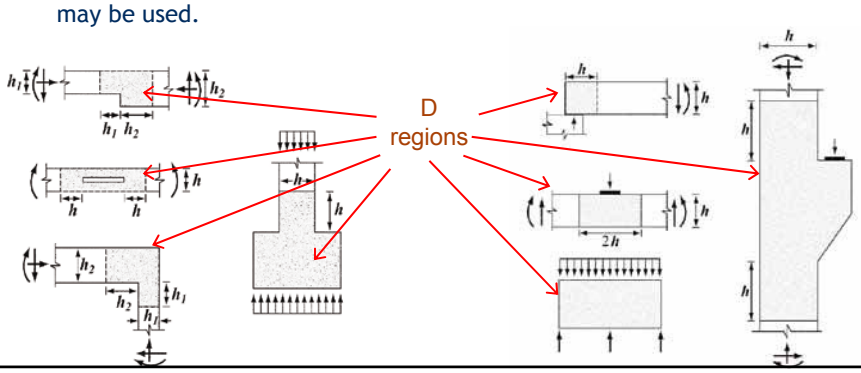

Poll: At failure, what is P_2 / P_1?

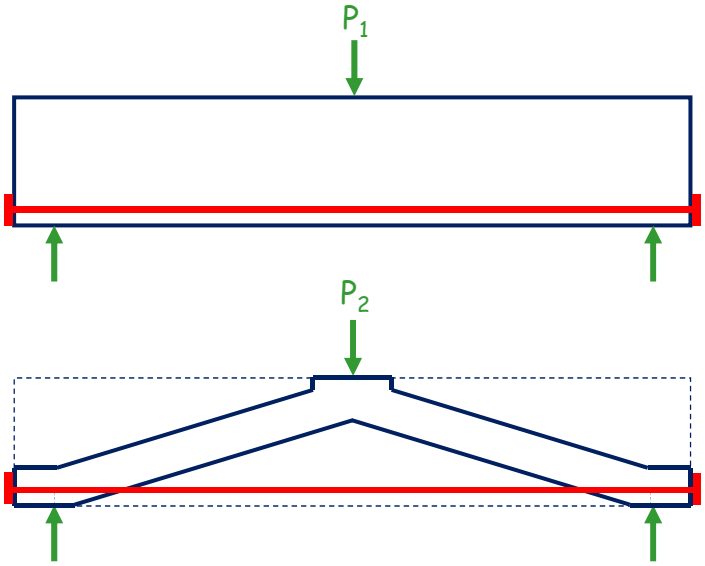

Please answer:

a) $P_2 \approx 0.5\ P_1$

b) $P_2 \approx 0.66\ P_1$

c) $P_2 \approx 0.75\ P_1$

d) $P_2 \approx P_1$

e) $P_2 \approx 1.33\ P_1$

f) $P_2 \approx 2.0\ P_1$

Concept by R Whittle, drawn by I Feltham. Used with permission

Struts

Cross-sectional dimensions of the strut are determined by dimensions of the nodes and assumptions made there.

Usually its thickness x dimension 'a' (- see Figures}

The stress in struts is rarely critical but the stress where struts abut nodes is (see later).

However . . . . .

6.5.2 Struts

Where there is no transverse tension

$\sigma_{Rd,max} = f_{cd}$

$= 0.85\ f_{ck}\ /1.5$

$= 0.57\ f_{ck}$

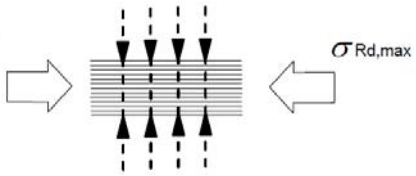

Otherwise, where there is transverse tension

$\sigma_{Rd,max} = 0.6\ \nu' f_{cd}$

Where:

$\nu' = 1 - f_{ck}/250$

$\sigma_{Rd,max} = 0.6 \times (1 - f_{ck}/250) \times 1.0 \times f_{ck}\ /1.5$

$= 0.4\ (1 - f_{ck}/250)\ f_{ck}$

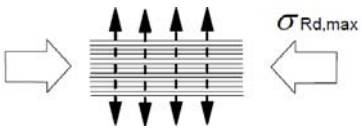

Bi-axial Strength of Concrete

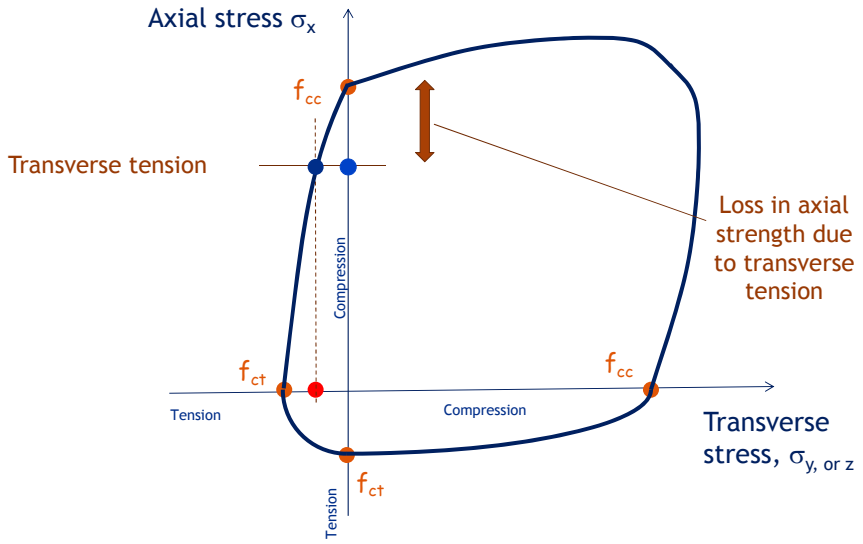

6.5.3 Ties/Discontinuities in struts

Areas of non-linear strain distribution are referred to as "discontinuities"

Partial discontinuity

Full discontinuity

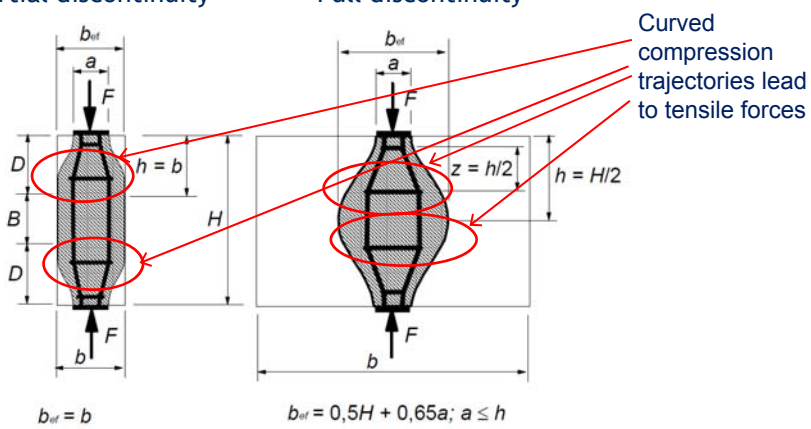

Partial discontinuity

Tension in the reinforcement is T

When $b \leq H/2$

$T = \frac{1}{4}[(b - a)/b]\ F$

Reinforcement ties to resist the transverse force T may be "discrete" or can be "smeared" over the length of tension zone arising from the compression stress trajectories

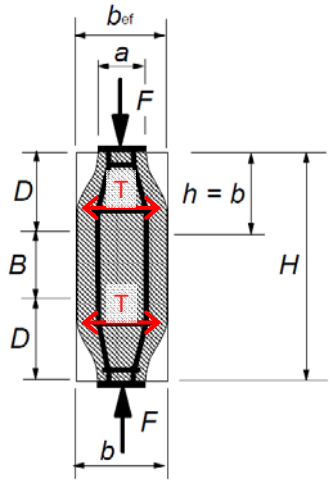

$b_{ef} = b$

Full discontinuity

When $b > H/2$

$T = \frac{1}{4}(1 - 0.7a/h)\ F$

Reinforcement ties to resist the transverse force T may be "discrete" or can be "smeared" over the length of tension zone arising from the compression stress trajectories

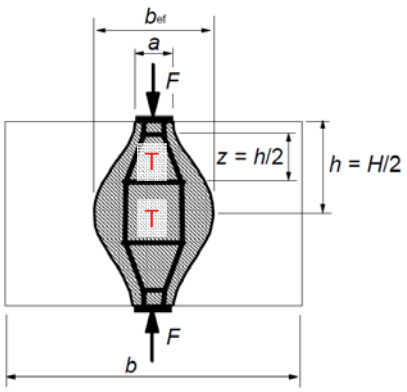

$b_{ef} = 0{,}5H + 0{,}65a;\ a \leq h$

6.5.4 Nodes

Nodes are typically classified as:

CCC – Three compressive struts

CCT – Two compressive struts and one tie

CTT – One compressive strut and two ties

CCC nodes

The maximum stress at the edge of the node:

$\sigma_{Rd,max} = k_1 \nu' f_{cd}$

Where:

$k_1 = 1.0$

$\nu' = 1 - f_{ck}/250$

$\sigma_{Rd,max} = (1 - f_{ck}/250) \times 0.85 \times f_{ck} / 1.5$

$= 0.57 (1 - f_{ck}/250) f_{ck}$

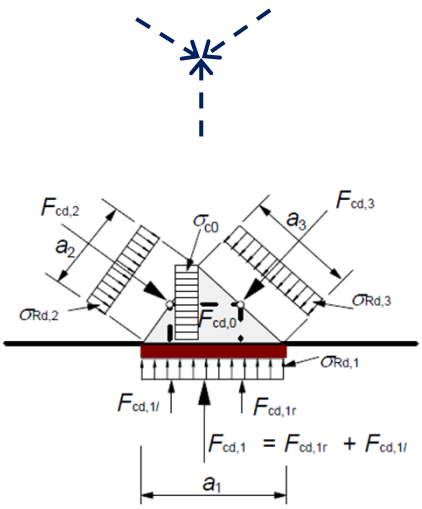

NB Hydrostatic pressures: the stresses σ_{c0}, $\sigma_{Rd,1}$ $\sigma_{Rd,2}$ & $\sigma_{Rd,2}$ etc are all the same.

CCT nodes

The maximum compressive stress is:

$\sigma_{Rd,max} = k_2\ \nu' f_{cd}$

Where:

$k_2 = 0.85$

$\nu' = 1 - f_{ck}/250$

$\sigma_{Rd,max} = 0.85\ (1 - f_{ck}/250) \times 0.85 \times f_{ck}\ /1.5$

$= 0.48\ (1 - f_{ck}/250)\ f_{ck}$

(stresses in the two struts should be equal)

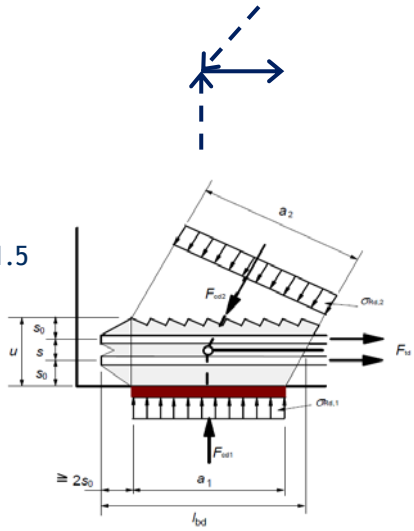

CTT nodes

The maximum compressive stress is:

$\sigma_{Rd,max} = k_3\ \nu' f_{cd}$

Where:

$k_3 = 0.75$

$\nu' = 1 - f_{ck}/250$

$\sigma_{Rd,max} = 0.75\ (1 - f_{ck}/250) \times 0.85 \times f_{ck}\ /1.5$

$= 0.43\ (1 - f_{ck}/250)\ f_{ck}$

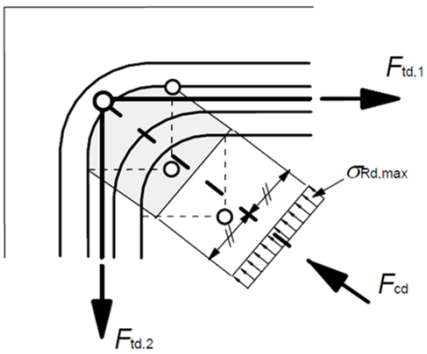

Ties

Design strength, $f_{yd} = f_{yk}/1.15$

Reinforcement should be anchored into nodes

The anchorage may start as the bar enters the strut

Construction of an STM for a deep beam using the load path method

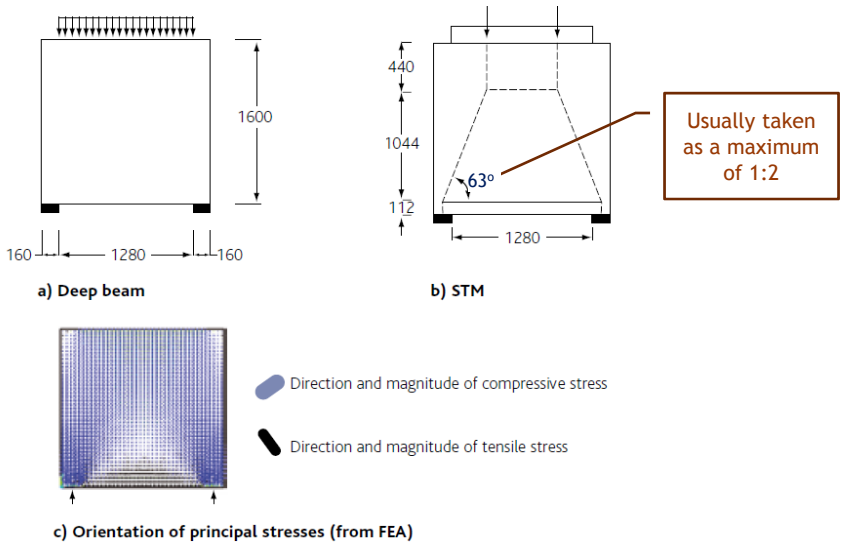

Strut & Tie Models

Similarity (single point load)

(a) H = L

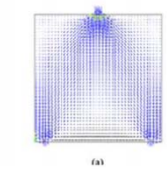

(b) H = 1.5 L

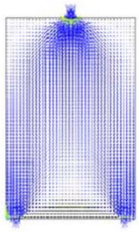

(c) H = 2.0 L

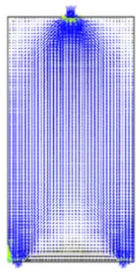

(d) H = 2.5 L

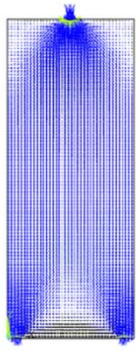

Worked Example

Pile-Cap Using S&T

Pile-cap example

Using a strut and tie model, what tension reinforcement is required for a pile cap supporting a 500 mm square column carrying 2500 kN (ULS), and itself supported by two-piles of 600 mm diameter.

f_{ck} = 30 MPa

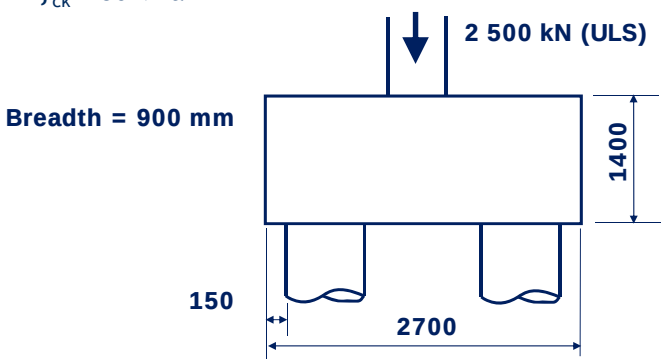

Pile-cap example

Angle of strut = $\tan^{-1}(900/1300)$
= 34.7°

Width of strut* = 250/cos 34.7°
= 304* mm

Force per strut = 1250/cos 34.7°
= 1520 kN

Force in tie = 1250 tan 34.7°
= 866 kN

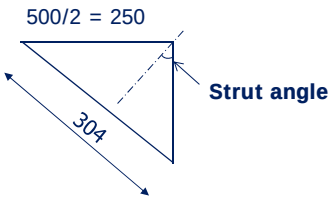

STM

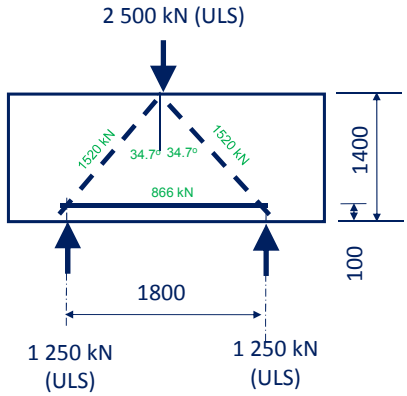

* Conventional but simplistic - see later

Pile-cap example

Area of steel required:

$A_s \geq 866 \times 10^3/435$

$\geq 1991\ mm^2$

Use 5 H25s (2455 mm^2)

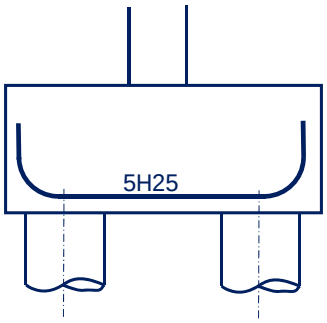

Usually that is probably as far as you would go. But for the sake of completeness and the exercise you will be undertaking we will continue:

Pile-cap example

Check forces in truss

Stress in **strut** (top - under half of column)

$=1520 \times 10^3/(304 \times 500)$

σ_{Ed} $=10.0$ MPa

Strength of **strut**:

$\sigma_{Rd,max}$ $= 0.4\ (1-f_{ck}/250)\ f_{ck}$

$= 10.6$ MPa

OK

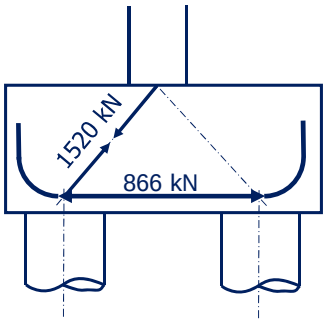

Pile-cap example

Nodes: top

From before

$\sigma_{Ed,2}$ = 10.0 MPa (from above)

$\sigma_{Ed,3}$ = 10.0 MPa (as above)

$\sigma_{Ed,1}$ = 2500 x $10^3/(500^2)$

= 10.0 MPa

$\sigma_{Rd,max}$ (for CCC node)

= 0.57 $(1-f_{ck}/250)\, f_{ck}$

= 15.0 MPa

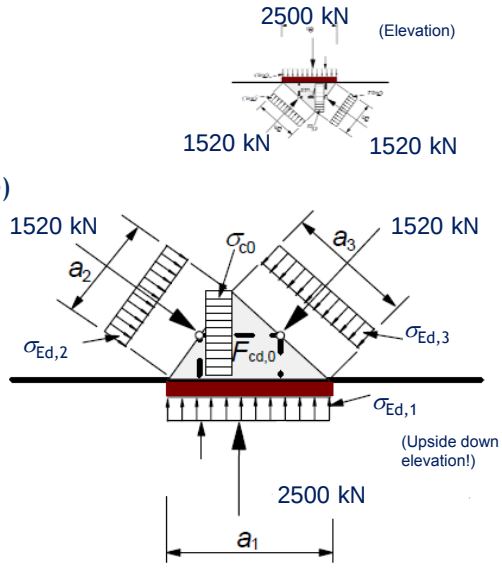

Pile-cap example

Nodes: bottom (as a check)

Strut above

Width of strut* = 600/cos 34.7°

= 730 mm

Stress in strut (bottom as an ellipse)

$\sigma_{Ed,2}$ =1520 x $10^3/(600 \times 730 \times \Pi/4)$

= 4.4 MPa

$\sigma_{Ed,1}$ = 1250 x $10^3/(\Pi \times 300^2)$

= 4.4 MPa

$\sigma_{Rd,max}$ (for CCT node)

= 0.48 $(1-f_{ck}/250)\, f_{ck}$

= 12.7 MPa OK

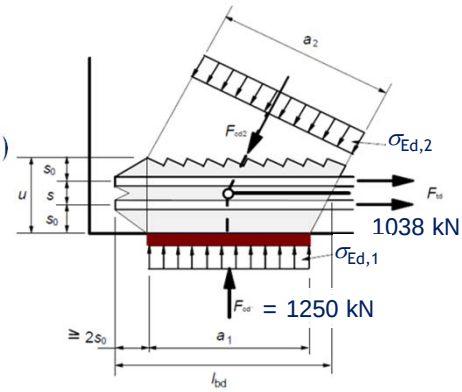

* Conventional but simplistic - see later

Pile-cap example

Detailing

Detailed checks are also required for the following:

- Small piles
- Determine local tie steel across struts (if req'd)
- Detailing of reinforcement anchorage (large radius bends may be required)

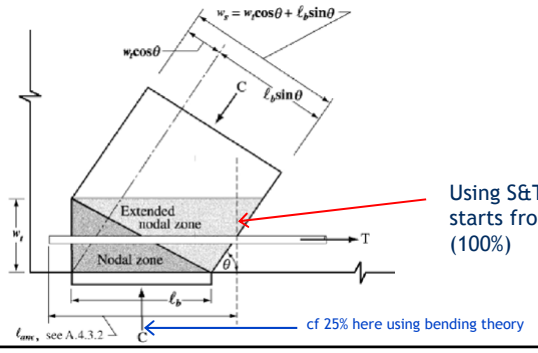

Using S&T, anchorage starts from here (100%)

cf 25% here using bending theory

Strut dimensions

Re * previous statement that calculated strut dimension as 304 mm were "Conventional but simplistic - see later"

For the CCT node:

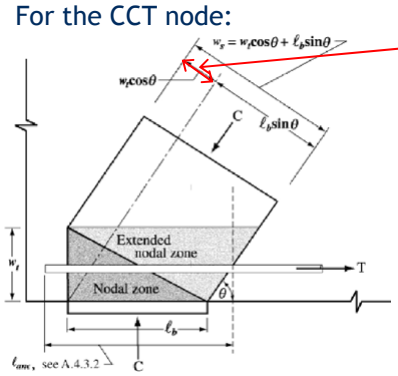

Not used in previous calcs. Hence struts themselves rarely critical.

Similarly for the CCC node

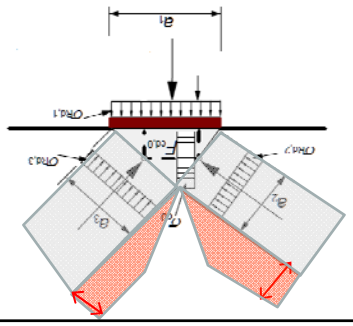

Comparison: Pile-cap example

Compare previously designed pile cap using bending theory

M_{Ed} =2500 x 1.800/4 = 1125 kNm

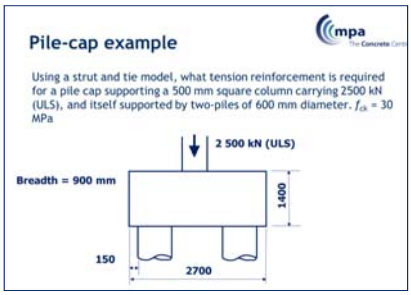

Assume:

25 mm ϕ for tension reinforcement

12 mm link

$$d = h - c_{nom} - \phi_{link} - 0.5\phi$$
$$= 1400 - 75 - 12 - 13$$
$$= 1300 \text{ mm}$$

Comparison: Pile-cap example

$$K' = 0.208$$

$$K = \frac{M_{Ed}}{bd^2 f_{ck}}$$
$$= \frac{1125 \times 10^6}{900 \times 1300^2 \times 30}$$
$$= 0.025 < K'$$

$$z = \frac{d}{2}\left[1 + \sqrt{1 - 3.53K}\right]$$
$$= \frac{1300}{2}\left[1 + \sqrt{1 - 3.53 \times 0.025}\right] = 1270 \text{ mm}$$

δ	K'
1.00	0.208
0.95	0.195
0.90	0.182
0.85	0.168
0.80	0.153
0.75	0.137
0.70	0.120

A_s = 1125 x 10^6 / (435 x 1270) = 2036 mm^2

Use 5 H25 (2454 mm^2)

c.f. using S&T **1991** mm^2 req'd and 5H25 provided

Sections 5.7 – 5.10 : outline

Other Items re. Analysis

5.7 Non-linear analysis

May be used for ULS and SLS provided equilibrium and compatibility are satisfied and sections can withstand inelastic deformations.

5.8 Analysis of second order effects with axial load.

Slenderness and 2nd order moments – **dealt with in Columns lecture, viz:**

5.9 Lateral instability of slender beams

Limits on h/b in slender rectangular beams

5.10 Prestressed members and structures.

Max stressing forces, max concrete stresses, prestress force, losses, effects of prestressing

5.11 Particular structural members

Flat slabs are flat slabs and shear walls are shear walls (!!)

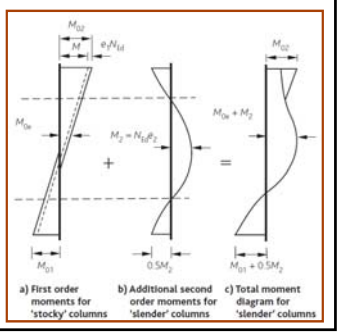

Design Methods

Elastic methods – e.g. moment distribution, continuous beam, sub-frame, plane frame, etc **– all acceptable.**

Plastic methods – yield line, Hillerborg **- acceptable**

Finite Element Methods - elastic, elasto-plastic, non-linear etc **- acceptable**

Common pitfalls:

- Using long term E-values (typically 1/2 to 1/3 short term value)
- Not using cracked section properties (typically 1/2 gross properties) by adjusting E-value to suit
- Therefore appropriate E-values are usually 4 to 8 kN/mm^2
- M_{tmax} (and column transfer moments)
- Check punching

TCC Guidance available

Exercises

Lecture 4

Design Execise: Pile Cap Using S&T

Using a strut and tie model, what tension reinforcement is required for a pile cap supporting a 650 mm square column carrying 4 000 kN (ULS), and itself supported by two-piles of 750 mm diameter?

Are the Node stresses OK?

f_{ck} = 30 MPa

Breadth = 1050 mm

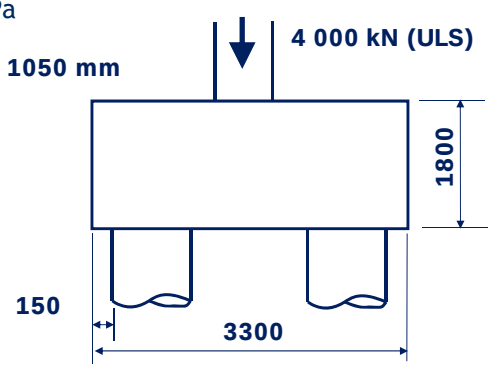

If there is time: Design $A_{sreq'd}$ using beam theory

Design Execise: Pile Cap Using S&T (pro forma)

Angle of strut = $\tan^{-1}$(_____/_____)
= _____°

Width of strut (?) = _____/cos _____°
= _____ mm

Force per strut = _____/cos _____°
= _____ kN

Force in tie = _____ tan _____°
= _____ kN

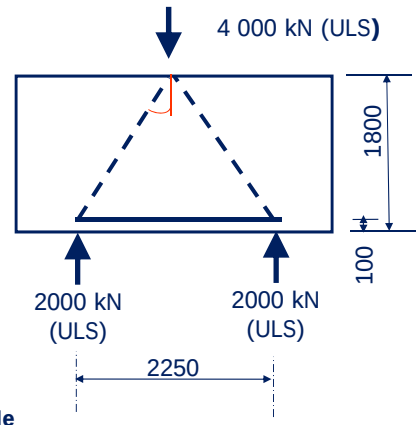

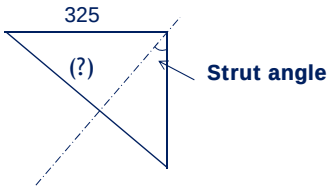

Design Execise: Pile Cap Using S&T (pro forma)

Check forces in truss

Stress in strut (top) = _____ x 10^3/(_____x 650)

σ_{Ed} = _____ MPa

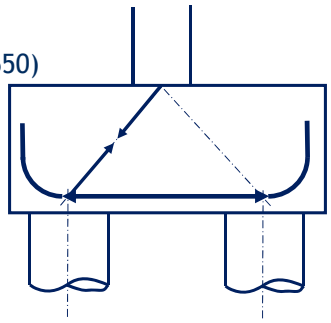

Strength of strut:

$\sigma_{Rd,max}$ = 0.4 (1-f_{ck}/250) f_{ck}

= _____ MPa

Area of steel required:

A_s ≥ _____ x 10^3/435

≥ _____ mm^2

Use _____ H _____

Design Execise: Pile Cap Using S&T (pro forma)

Nodes: bottom

Above pile

$\sigma_{Ed,1}$ = 2000 x 10^3/(____^{2} π)

= _____ MPa

$\sigma_{Ed,2}$ = _____ MPa (say as above)

$\sigma_{Rd,max}$ = 0.48 (1-f_{ck}/250) f_{ck}

= _____ MPa

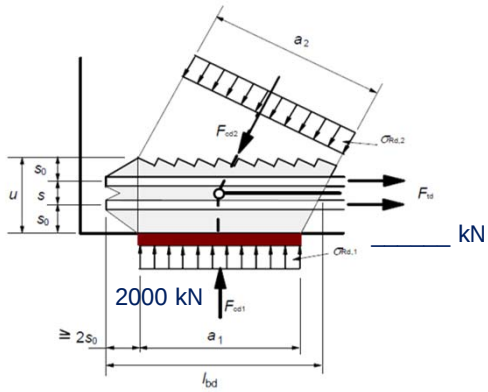

_____ kN

Design Execise: Pile Cap Using S&T (pro forma)

Nodes: top

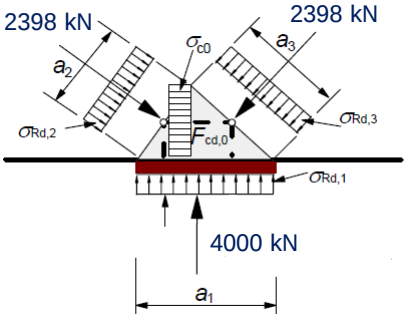

From above

$\sigma_{Ed,1}$ = 4000 x $10^3/(650^2)$

= _____ MPa

$\sigma_{Ed,2}$ = _____ MPa

$\sigma_{Ed,3}$ = _____ MPa

$\sigma_{Rd,max}$

= $0.57\ (1-f_{ck}/250)\ f_{ck}$

= _____ MPa

Working space

End of Lecture 4

EN 1992-1-1: Section 5 Structural Analysis:

- Section 5.1 General
- Section 5.2 Geometric Imperfections
- Section 5.3 Idealisation
- Sections 5.4 & 5.5 Linear Elastic Analysis
- Section 5.6 Plastic Analysis
- Section 5.6.4 Strut & Tie
  - Worked Example Using Strut & Tie
- Sections 5.7 to 5.11 - outline
- Exercises